TE150H LCD Electronic Thermostat 24V

Mounting Location:

The thermostat is restricted to be used indoors only. It should be mounted on an inner wall about 1.5m above the floor at a position where it is readily affected by changes of the general room temperature/humidity with freely circulating air. Avoid to mounting on hot surfaces (e.g. TV, heater, refrigerator), do not expose unit to direct sunshine, draft, equipment radiation or in enclosed spaces. Do not expose this unit to moisture.

Mounting Instruction:

1/.Remove cover:
- Place the screwdriver at the bottom of the locks and loosen the screws (@ '1') & (@ '2')
- Remove the top cover carefully forward(@ '3') and then upward(@ '4 ')to loosen the top locks

2/.Mounting without bottom plate(Diagram 1):
- Ensure the surface is level
- Pull the cables through the hole near the terminal block
- Use wall anchors provided if necessary.
- Fasten the thermostat with 2 long screws through the 2 mounting holes

3/.Mounting with bottom plate(Diagram 2):
- Adjust the bottom plate on the wall or junction box and ensure the plate is at surface level and cover the junction box comfortably
- If necessary, pull the cables out of the middle hole of the bottom plate
- Use wall anchors provided if necessary
- Fasten the plate with 2 long screws
- Pull the cables at the hole near the terminal block
- Fasten the thermostat with 2 screws through the 2 mounting holes

4/.Electrical connection:
- Connect according to the circuit diagram attached inside the top cover
- Do not use metal conduit or shielded wire
- Recommended to add fuse or protective device in the line circuit

5/.Install the cover:
- Ensure the rubber key is firmly attached on the PCB (@ '6a')
- Rubber key fitting location on the cover is right towards to rubber key(@ '6b')
- Replace the cover in direction (@ '7') and ensure the top locks are fastened
- Press the cover in direction (@ '8') and fasten the cover with 2 screws (@ '9') &(@ '10')
- Check that the rubber keys can be moved smoothly, otherwise reinstall the cover and realign properly

6/. Temperature setting up:
- Select the comfortable temperature by pressing ▲ or ▼ to the desirable temperature set point. The set point will flash after releasing the keys.
- The display of the room temperature will return after 10 seconds
- Backlight will illuminate by pressing ▲or ▼ or , it will return after 10 seconds once the keys are released

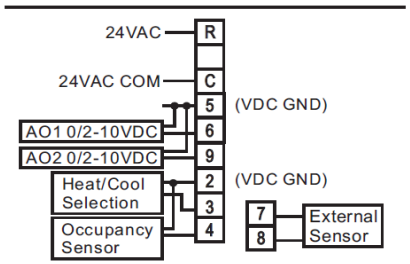

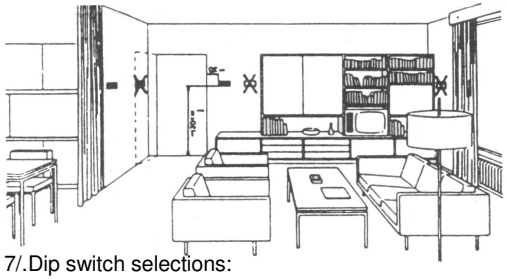

7/.Dip switch selections:

Pole	OFF	ON
1	°C Scale	°F Scale
2	EU for RA actuator	US for DA actuator
3	Internal sensor	External sensor
4	0-10Vdc	2-10Vdc
5	Limited set-point range	Full set-point range
6	*Single output A01	Dual output A01, A02
7	Two heating or two cooling outputs	One heating, one cooling output

8/. Adjusting the Set point(Dip switch 5)
With dipswitch # 5 we can select a normal or limited temperature range. See tables below.

Normal set point range:

Temperature unit	Economy(Unoccupied) and Heat	Normal(Occupied)	Economy(Unoccupied) and Cool
°F(1°F resolution)	42-122°F	50-130°F	58-138°F
°C(0.5°C resolution)	6.0-51°C	10.0-55°C	14.0-59°C

Limited set point range:

Temperature unit	Economy(Unoccupied) and Heat	Normal(Occupied)	Economy(Unoccupied) and Cool
°F(1°F resolution)	56-68°F	64-76°F	72-84°F
°C(0.5°C resolution)	14.0-20°C	18.0-24°C	22.0-28°C

9/. Comfort mode and economy mode
Occupancy sensor open: represents occupied, thermostat will run comfort mode.
Occupancy sensor closed: represents unoccupied, thermostat will run economy mode and LCD will display the key. User cannot adjust set point in economy mode.

10. Economy override:
This function only operates in economy mode.
Hold ▲/▼/ key for 2 seconds to enable this function.
Hold key for 2 seconds to disable this function
When economy override mode is enabled, user can use ▲/▼ key to adjust the set point.
Thermostat will remain in the override for 2 hours and then will go back to economy mode.

Maintenance:

Caution: Switch off the electrical source before maintaining the thermostat. We recommend that all maintenance by trained personnel.

No heating/cooling control:
- Check the thermistor sensor performance by measuring the corresponding variable resistance under different temperatures, if it is in good condition and the LCD value will change accordingly. If the LCD value does not change then trace the control circuit or the LCD connection.
- If the control circuit has problem, replace the PCB.

Technical Data:

Temperature Range:	10 - 55°C /50 - 131°F
Proportion Band:	2°C /4°F
Power Supply:	24Vac ±10%
Frequency:	50/60Hz
Analogue output:	0 - 10VDC
Sensing Element:	NTC thermistor
Terminals:	2mm Cable
Operating Temperature:	0 - 60°C / 32 - 140°F
Storage Temperature:	-10 - 65°C / 14 - 149°F

Dimension in mm(inches)

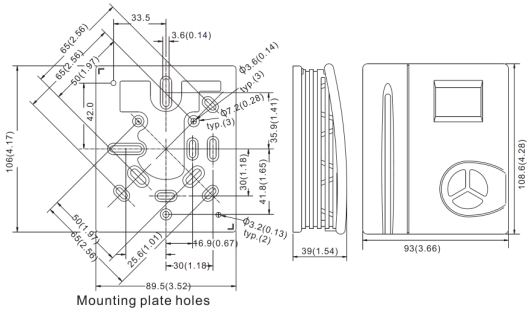

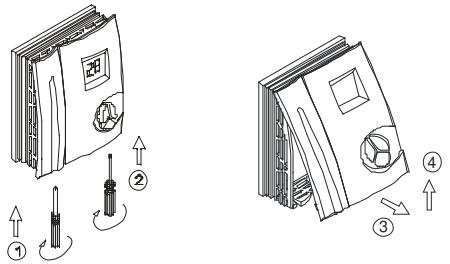

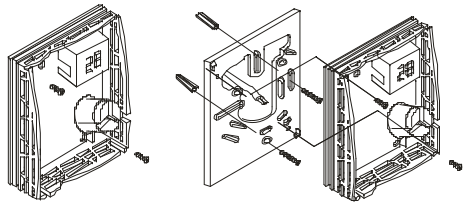

Diagram 1 Diagram 2

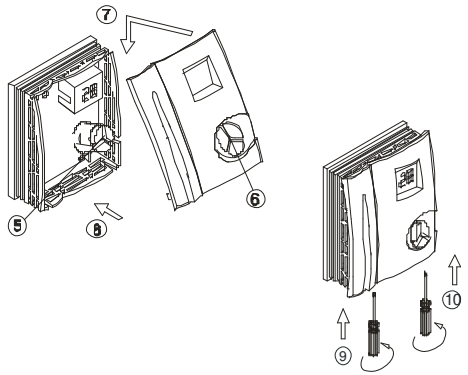

160429